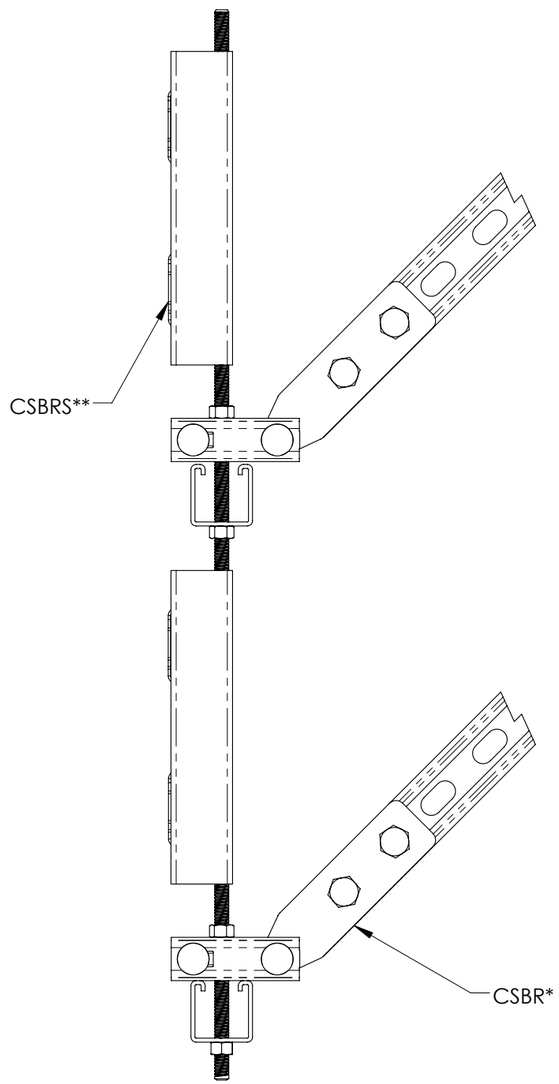

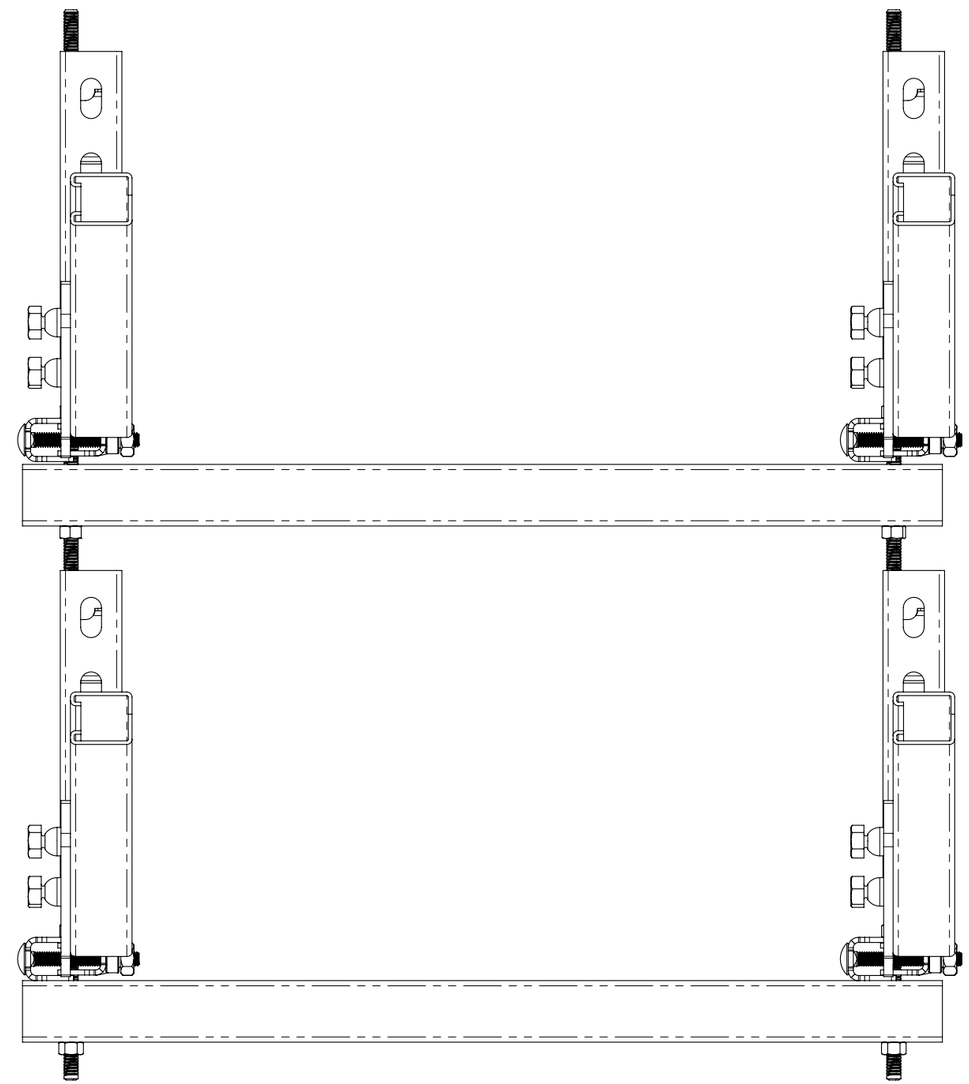

*CSBR1, CSBR2
**CSBRS2 - CSBRS6