Click here to download DXF file

DXF file is not viewable through a PDF program (Adobe PDF viewer or web browser). To open DXF drawing, click here and save it to your computer.

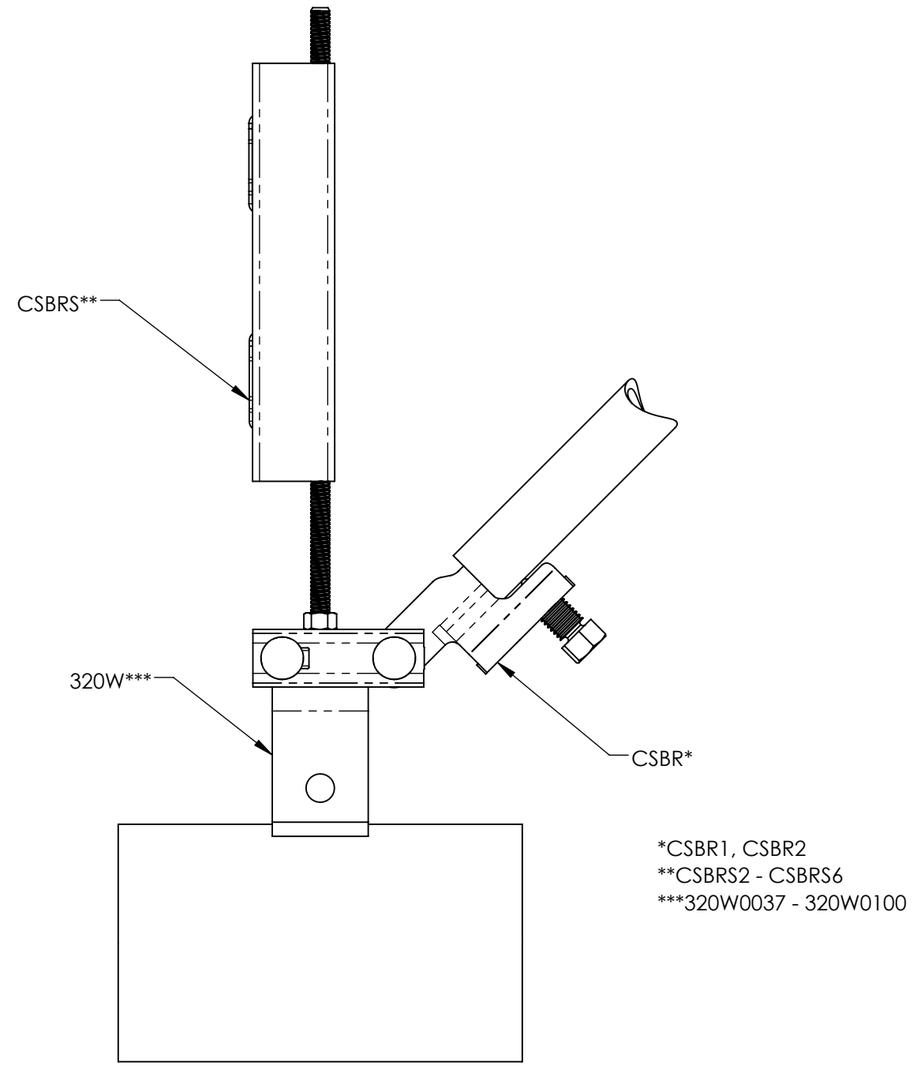
CSBRS**
320W***
CSBR*
*CSBR1, CSBR2
**CSBRS2 - CSBRS6
***320W0037 - 320W0100