We connect and protect

MultipacPRO Cover Plate, Plain, Depth 340 mm

Power Utilities

CATALOG NUMBER

30860-503

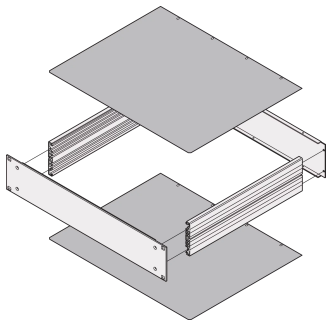

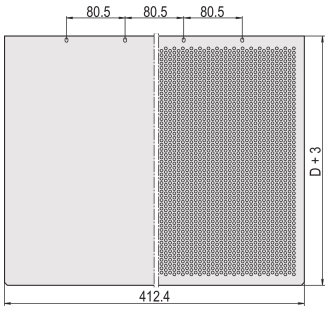

Cover plates plain will close the 19" chassis on top and bottom side. They protect the chassis from parts that could fall into the chassis.

CERTIFICATIONS

RoHS COMPLIANT

FEATURES

Plain cover plates can be used as either top or base plates; inserted into base structure

PRODUCT ATTRIBUTES

Product Type: Cover Plate

Product Family: MultipacPRO

Type: Plain

Depth: 340 mm

Package Quantity: 1

ADDITIONAL PRODUCT DETAILS

Please order EMC gasketing kit separately.

WARNING

nVent products shall be installed and used only as indicated in nVent's product instruction sheets and training materials. Instruction sheets are available at www.nvent.com and from your nVent customer service representative. Improper installation, misuse, misapplication or other failure to completely follow nVent's instructions and warnings may cause product malfunction, property damage, serious bodily injury and death and/or void your warranty.

Our powerful portfolio of brands:

CADDY ERICO HOFFMAN ILSCO SCHROFF TRACHTE

©2025 nVent. All nVent marks and logos are owned or licensed by nVent Services GmbH or its affiliates. All other trademarks are the property of their respective owners. nVent reserves the right to change specifications without notice.

This document is system-generated.