We connect and protect

EuropacPRO EMC Shielding Kit, Front to Side Panel

Power Utilities

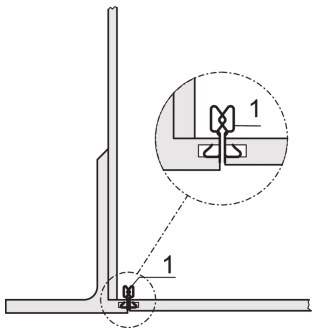

For vertical stainless steel EMC shielding between recessed mounted shielded front panels and side panel.

CERTIFICATIONS

RoHS COMPLIANT

FEATURES

For vertical EMC shielding between recessed mounted shielded front panels and side panel

SPECIFICATIONS

Table 1/1

Catalog Number	Rack Height	Product Family	Product Type	Works With
24562-199	3 U	EuropacPRO	Shielding Kit	Subracks
24562-299	4 U	EuropacPRO	Shielding Kit	Subracks
24562-499	6 U	EuropacPRO	Shielding Kit	Subracks

WARNING

nVent products shall be installed and used only as indicated in nVent's product instruction sheets and training materials. Instruction sheets are available at www.nvent.com and from your nVent customer service representative. Improper installation, misuse, misapplication or other failure to completely follow nVent's instructions and warnings may cause product malfunction, property damage, serious bodily injury and death and/or void your warranty.

Our powerful portfolio of brands:

CADDY ERICO HOFFMAN ILSCO SCHROFF TRACHTE

©2025 nVent. All nVent marks and logos are owned or licensed by nVent Services GmbH or its affiliates. All other trademarks are the property of their respective owners. nVent reserves the right to change specifications without notice.

This document is system-generated.