We connect and protect

Front Panel, Refrofit Shielding

Flat front panel. Shieldable with stainless steel EMC gasket.

CERTIFICATIONS

RoHS COMPLIANT

FEATURES

For stainless steel EMC gasket

Al, 2.5 mm, front anodized, conductive

SPECIFICATIONS

Depth (D): 2.5mm
Material: Aluminum
Accessory Type: Front panel
Product Type: Front Panel
Type: Front Panel without Handle
EMC Shielding: No (Retrofittable)

Table 1/3

Catalog Number	Rack Height	Rack Width	Package Quantity	Mounting	EMC Gasket Type	Front Finish
20846-425	3U	3HP	1	Screw-on Front	Stainless Steel	Anodized

CatalogNumber	Rack Height	Rack Width	Package Quantity	Mounting	EMC Gasket Type	Front Finish
30846-865	6U	2HP	1	Screw-on Front	Stainless Steel	Anodized
20846-426	3U	4HP	1	Screw-on Front	Stainless Steel	Anodized
20846-427	3U	5HP	1	Screw-on Front	Stainless Steel	Anodized
20846-428	3U	6HP	1	Screw-on Front	Stainless Steel	Anodized
20846-429	3U	7HP	1	Screw-on Front	Stainless Steel	Anodized
20846-443	6U	4HP	1	Screw-on Front	Stainless Steel	Anodized
20846-430	3U	8HP	1	Screw-on Front	Stainless Steel	Anodized
20846-442	6U	3HP	1	Screw-on Front	Stainless Steel	Anodized
20846-431	3U	10HP	1	Screw-on Front	Stainless Steel	Anodized
20846-444	6U	5HP	1	Screw-on Front	Stainless Steel	Anodized
20846-432	3U	12HP	1	Screw-on Front	Stainless Steel	Anodized
20846-445	6U	6HP	1	Screw-on Front	Stainless Steel	Anodized
20846-433	3U	14HP	1	Screw-on Front	Stainless Steel	Anodized
20846-446	6U	7HP	1	Screw-on Front	Stainless Steel	Anodized
20846-424	3U	16HP	1	Screw-on Front	Stainless Steel	Anodized
20846-447	6U	8HP	1	Screw-on Front	Stainless Steel	Anodized
20846-448	6U	10HP	1	Screw-on Front	Stainless Steel	Anodized
20846-434	3U	21HP	1	Screw-on Front	Stainless Steel	Anodized

CatalogNumber	Rack Height	Rack Width	Package Quantity	Mounting	EMC Gasket Type	Front Finish
20846-449	6U	12HP	1	Screw-on Front	Stainless Steel	Anodized
20846-436	3U	28HP	1	Screw-on Front	Stainless Steel	Anodized
20846-450	6U	14HP	1	Screw-on Front	Stainless Steel	Anodized
20846-456	6U	16HP	1	Screw-on Front	Stainless Steel	Anodized
20846-451	6U	21HP	1	Screw-on Front	Stainless Steel	Anodized
20846-437	3U	42HP	1	Screw-on Front	Stainless Steel	Anodized
30846-588	2U	84HP	1	Screw-on Front	Stainless Steel	Anodized
20846-452	6U	28HP	1	Screw-on Front	Stainless Steel	Anodized
20846-438	3U	63HP	1	Screw-on Front	Stainless Steel	Anodized
30846-676	3U	84HP	1	Screw-on Front	Stainless Steel	Anodized
20846-453	6U	42HP	1	Screw-on Front	Stainless Steel	Anodized
30846-683	4U	84HP	1	Screw-on Front	Stainless Steel	Anodized
20846-454	6U	63HP	1	Screw-on Front	Stainless Steel	Anodized
30846-771	6U	84HP	1	Screw-on Front	Stainless Steel	Anodized
30846-859	9U	84HP	1	Screw-on Front	Stainless Steel	Anodized
30846-864	3U	2HP	1	Screw-on Front	Stainless Steel	Anodized

Table 2/3

Catalog Number	Rear Finish	Treated Edges	Complies With	Finish	Height (H)	Width (W)

20846-425	Conductive	No	IEC 60297-3-101, IEEE 1101.1/10	Anodized	128.4mm	14.9mm
30846-865	Conductive	No	IEC 60297-3-101, IEEE 1101.1/10	Anodized	261.8mm	9.8mm
20846-426	Conductive	No	IEC 60297-3-101, IEEE 1101.1/10	Anodized	128.4mm	20mm
20846-427	Conductive	No	IEC 60297-3-101, IEEE 1101.1/10	Anodized	128.4mm	25mm
20846-428	Conductive	No	IEC 60297-3-101, IEEE 1101.1/10	Anodized	128.4mm	30.1mm
20846-429	Conductive	No	IEC 60297-3-101, IEEE 1101.1/10	Anodized	128.4mm	35.2mm
20846-443	Conductive	No	IEC 60297-3-101, IEEE 1101.1/10	Anodized	261.8mm	20mm
20846-430	Conductive	No	IEC 60297-3-101, IEEE 1101.1/10	Anodized	128.4mm	40.3mm
20846-442	Conductive	No	IEC 60297-3-101, IEEE 1101.1/10	Anodized	261.8mm	14.9mm
20846-431	Conductive	No	IEC 60297-3-101, IEEE 1101.1/10	Anodized	128.4mm	50.5mm
20846-444	Conductive	No	IEC 60297-3-101, IEEE 1101.1/10	Anodized	261.8mm	25mm
20846-432	Conductive	No	IEC 60297-3-101, IEEE 1101.1/10	Anodized	128.4mm	60.6mm
20846-445	Conductive	No	IEC 60297-3-101, IEEE 1101.1/10	Anodized	261.8mm	30.1mm
20846-433	Conductive	No	IEC 60297-3-101, IEEE 1101.1/10	Anodized	128.4mm	70.8mm
20846-446	Conductive	No	IEC 60297-3-101, IEEE 1101.1/10	Anodized	261.8mm	35.2mm

20846-424	Conductive	No	IEC 60297-3-101, IEEE 1101.1/10	Anodized	128.4mm	80.9mm
20846-447	Conductive	No	IEC 60297-3-101, IEEE 1101.1/10	Anodized	261.8mm	40.3mm
20846-448	Conductive	No	IEC 60297-3-101, IEEE 1101.1/10	Anodized	261.8mm	50.5mm
20846-434	Conductive	No	IEC 60297-3-101, IEEE 1101.1/10	Anodized	128.4mm	106.3mm
20846-449	Conductive	No	IEC 60297-3-101, IEEE 1101.1/10	Anodized	261.8mm	60.6mm
20846-436	Conductive	No	IEC 60297-3-101, IEEE 1101.1/10	Anodized	128.4mm	141.9mm
20846-450	Conductive	No	IEC 60297-3-101, IEEE 1101.1/10	Anodized	261.8mm	70.8mm
20846-456	Conductive	No	IEC 60297-3-101, IEEE 1101.1/10	Anodized	261.8mm	80.9mm
20846-451	Conductive	No	IEC 60297-3-101, IEEE 1101.1/10	Anodized	261.8mm	106.3mm
20846-437	Conductive	No	IEC 60297-3-101, IEEE 1101.1/10	Anodized	128.4mm	213mm
30846-588	Conductive	No	IEC 60297-3-101, IEEE 1101.1/10	Anodized, Passivated	84mm	426.4mm
20846-452	Conductive	No	IEC 60297-3-101, IEEE 1101.1/10	Anodized	261.8mm	141.9mm
20846-438	Conductive	No	IEC 60297-3-101, IEEE 1101.1/10	Anodized	128.4mm	319.7mm
30846-676	Conductive	No	IEC 60297-3-101, IEEE 1101.1/10	Anodized, Passivated	128.4mm	426.4mm
20846-453	Conductive	No	IEC 60297-3-101, IEEE 1101.1/10	Anodized	261.8mm	213mm

30846-683	Conductive	No	IEC 60297-3-101, IEEE 1101.1/10	Anodized	172.9mm	426.4mm
20846-454	Conductive	No	IEC 60297-3-101, IEEE 1101.1/10	Anodized	261.8mm	319.7mm
30846-771	Conductive	No	IEC 60297-3-101, IEEE 1101.1/10	Anodized	261.8mm	426.4mm
30846-859	Conductive	No	IEC 60297-3-101, IEEE 1101.1/10	Anodized	395.1mm	426.4mm
30846-864	Conductive	No	IEC 60297-3-101, IEEE 1101.1/10	Anodized	128.4mm	9.8mm

Table 3/3

Catalog Number	Quick Ship
20846-425	No
30846-865	No
20846-426	No
20846-427	No
20846-428	No
20846-429	No
20846-443	No
20846-430	No
20846-442	No
20846-431	No
20846-444	No

Catalog Number	Quick Ship
20846-432	No
20846-445	No
20846-433	No
20846-446	No
20846-424	No
20846-447	No
20846-448	No
20846-434	No
20846-449	No
20846-436	No
20846-450	No
20846-456	No
20846-451	No
20846-437	No
30846-588	No
20846-452	No
20846-438	No
30846-676	No

Catalog Number	Quick Ship
20846-453	No
30846-683	No
20846-454	No
30846-771	No
30846-859	No
30846-864	No

ADDITIONAL PRODUCT DETAILS

Please order fixing material (sleeves, collar screws) separately.

DIAGRAMS

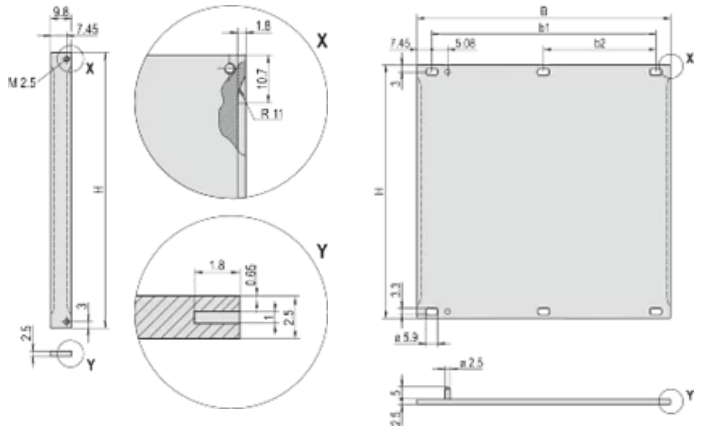

WARNING

nVent products shall be installed and used only as indicated in nVent's product instruction sheets and training materials. Instruction sheets are available at www.nvent.com and from your nVent customer service representative. Improper installation, misuse, misapplication or other failure to completely follow nVent's instructions and warnings may cause product malfunction, property damage, serious bodily injury and death and/or void your warranty.

North America
All locations
+1.763.422.2661
Chat with us:
nvent.com/schroff

Europe
Straubenhardt, Germany
+49.7082.794.0
Betschdorf, France
+33.3.88.90.64.90
Warsaw, Poland
+48.22.209.98.35
Assago, Italy
+39.02.932.7141
Chat with us:
nvent.com/schroff

Asia
Shanghai, China
+86.21.2412.6943
Qingdao, China
+86.532.8771.6101
Singapore
+65.6768.5800
Shin-Yokohama, Japan
+81.45.476.0271
Chat with us:
nvent.com/schroff

Middle East & India
Dubai, United Arab Emirates
+971.4.378.1700
Bangalore, India
+91.80.6715.2001
Istanbul, Turkey
+90.216.250.7374
Chat with us:
nvent.com/schroff

Our powerful portfolio of brands:

CADDY ERICO HOFFMAN ILSCO SCHROFF TRACHTE

©2025 nVent. All nVent marks and logos are owned or licensed by nVent Services GmbH or its affiliates. All other trademarks are the property of their respective owners. nVent reserves the right to change specifications without notice.

This document is system-generated.