We connect and protect

Tip-up Foot for Chassis, Plastic, RAL 7016

CATALOG NUMBER

20603-002

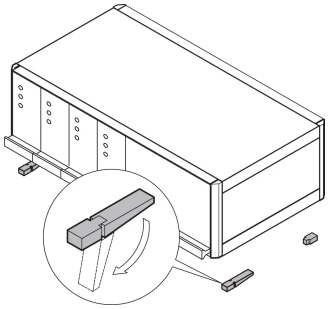

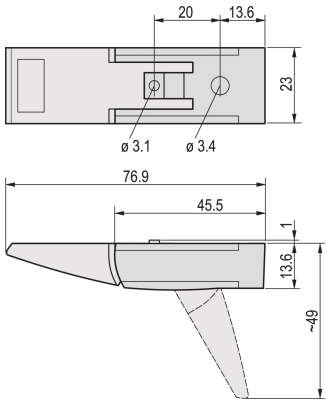

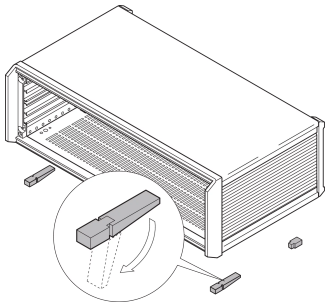

Flexible and robust Tip-up foot for chassis, with carrying capacity of 25 kg per foot. Suitable for RatiopacPRO/-AIR, PropacPRO, CompacPRO, Comptec and Interscale.

CERTIFICATIONS

RoHS COMPLIANT

FEATURES

Mounting holes are provided in bottom of case

Load-carrying capacity 25 kg per foot, max case weight: 50 kg

PRODUCT ATTRIBUTES

Package Quantity: 4
Material: Polyamide
Product Family: RatiopacPRO; RatiopacPRO AIR; CompacPRO; PropacPRO; Inpac
Product Type: Foot
Type: Foot
Works With: Cases

WARNING

nVent products shall be installed and used only as indicated in nVent's product instruction sheets and training materials. Instruction sheets are available at www.nvent.com and from your nVent customer service representative. Improper installation, misuse, misapplication or other failure to completely follow nVent's instructions and warnings may cause product malfunction, property damage, serious bodily injury and death and/or void your warranty.

North America
All locations
+1.763.422.2661
Chat with us:
nvent.com/schroff

Europe
Straubenhardt, Germany
+49.7082.794.0
Betschdorf, France
+33.3.88.90.64.90
Warsaw, Poland
+48.22.209.98.35
Assago, Italy
+39.02.932.7141
Chat with us:
nvent.com/schroff

Asia
Shanghai, China
+86.21.2412.6943
Qingdao, China
+86.532.8771.6101
Singapore
+65.6768.5800
Shin-Yokohama, Japan
+81.45.476.0271
Chat with us:
nvent.com/schroff

Middle East & India
Dubai, United Arab Emirates
+971.4.378.1700
Bangalore, India
+91.80.6715.2001
Istanbul, Turkey
+90.216.250.7374
Chat with us:
nvent.com/schroff

Our powerful portfolio of brands:

CADDY ERICO HOFFMAN ILSCO SCHROFF TRACHTE

©2025 nVent. All nVent marks and logos are owned or licensed by nVent Services GmbH or its affiliates. All other trademarks are the property of their respective owners. nVent reserves the right to change specifications without notice.

This document is system-generated.