We connect and protect

Low Voltage Male/Female Insulators, 60 mm

Data Solutions

CATALOG NUMBER

ISOTP60F8M8

CERTIFICATIONS

FEATURES

- Halogen free
- High resistance to leakage current
- Great stability of electrical and mechanical parameters
- Fiberglass reinforced
- UL® Recognized in E125470 and evaluated for dielectric withstand rating of 1,500 VAC/DC
- RoHS compliant

PRODUCT ATTRIBUTES

- Article Number: 542080
- Material: Steel; Glass Fibre Reinforced Polyamide
- Finish: Electrogalvanized

Working Temperature: −40 to 130°C
Insulation Voltage: 1000; 1500
Flammability Rating: UL® 94V-0
Complies With: IEC® 60695-2-11 (Glow Wire Test 960 °C)
Height (H): 60mm
Hex Width (W): 55mm
Depth (D): 63mm
Diameter (Ø): 44mm
Thread Size 1 (TS1): M8
Thread Length (TL): 17mm
Thread Size 2 (TS2): M8
Thread Depth (TD): 15mm
Static Load 1 (F1): 22000daN
Static Load 2 (F2): 10000daN
Unit Weight: 0.19kg

DIAGRAMS

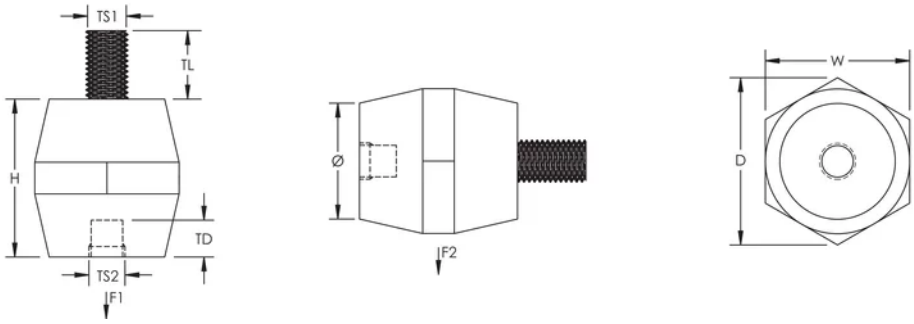

WARNING

nVent products shall be installed and used only as indicated in nVent's product instruction sheets and training materials. Instruction sheets are available at www.nvent.com and from your nVent customer service representative. Improper installation, misuse, misapplication or other failure to completely follow nVent's instructions and warnings may cause product malfunction, property damage, serious bodily injury and death and/or void your warranty.

Our powerful portfolio of brands:

CADDY ERICO HOFFMAN ILSCO SCHROFF TRACHTE

©2025 nVent. All nVent marks and logos are owned or licensed by nVent Services GmbH or its affiliates. All other trademarks are the property of their respective owners. nVent reserves the right to change specifications without notice.

This document is system-generated.