We connect and protect

Plug-In Unit Kit With IEL Handle, Shielded, Black, 6 U, 10 HP

CATALOG NUMBER

20848-597

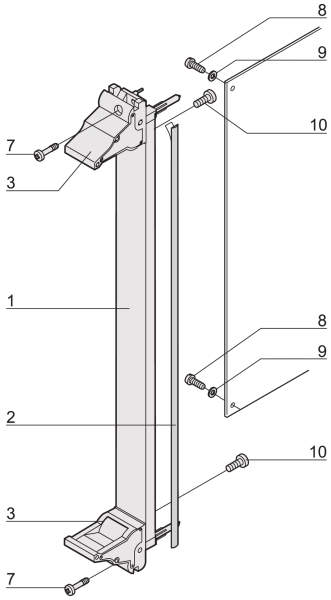

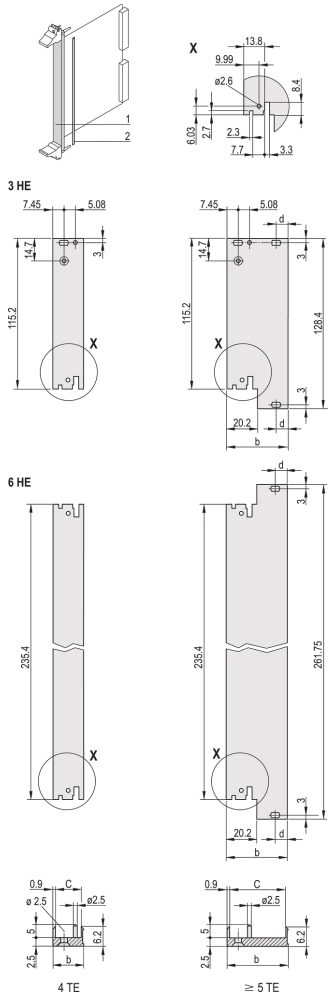

Plug-in unit, with IEL inserter/extractor black handle, 6 U, front assembly. The U-shaped front panel enable shielding with a textile gasket.

CERTIFICATIONS

RoHS COMPLIANT

FEATURES

U-shaped front panel for textile gasket

Suitable for insertion and extraction forces up to 700 N (per pair)

Enable the installation of a microswitch

Enable the installation of coding pegs in accordance with IEC 60297-3-103/ IEEE 1101.10

PRODUCT ATTRIBUTES

Rack Width: 10HP

Package Quantity: 1

Handle Type: IEL

Mounting: Screw-on Front; Screw-on Rear IO

EMC Gasket Type: Textile

Front Finish: Anodized

Rear Finish: Etched

Treated Edges: No

Complies With: IEC 60297-3-102; IEEE 1101.10; IEC 60297-3-103; IEEE 1101.1/11

EMC Shielding: Yes

Finish: Anodized; Passivated

Height (H): 261.8mm

Material: Aluminum

Product Type: Front Panel

Rack Height: 6U

Type: Front Panel with Handle (PIU)

Width (W): 50.5mm

DIAGRAMS

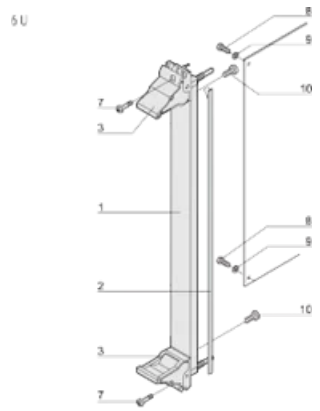

WARNING

nVent products shall be installed and used only as indicated in nVent's product instruction sheets and training materials. Instruction sheets are available at www.nvent.com and from your nVent customer service representative. Improper

installation, misuse, misapplication or other failure to completely follow nVent's instructions and warnings may cause product malfunction, property damage, serious bodily injury and death and/or void your warranty.

North America
All locations
+1.763.422.2661
Chat with us:
nvent.com/schroff

Europe
Straubenhardt, Germany
+49.7082.794.0
Betschdorf, France
+33.3.88.90.64.90
Warsaw, Poland
+48.22.209.98.35
Assago, Italy
+39.02.932.7141
Chat with us:
nvent.com/schroff

Asia
Shanghai, China
+86.21.2412.6943
Qingdao, China
+86.532.8771.6101
Singapore
+65.6768.5800
Shin-Yokohama, Japan
+81.45.476.0271
Chat with us:
nvent.com/schroff

Middle East & India
Dubai, United Arab Emirates
+971.4.378.1700
Bangalore, India
+91.80.6715.2001
Istanbul, Turkey
+90.216.250.7374
Chat with us:
nvent.com/schroff

Our powerful portfolio of brands:

CADDY ERICO HOFFMAN ILSCO SCHROFF TRACHTE

©2025 nVent. All nVent marks and logos are owned or licensed by nVent Services GmbH or its affiliates. All other trademarks are the property of their respective owners. nVent reserves the right to change specifications without notice.

This document is system-generated.