We connect and protect

1 U Air Deflector for 19" Fan Tray, 6 Fans, Front Solid, 330 mm, RAL 9006

CATALOG NUMBER

10713-151

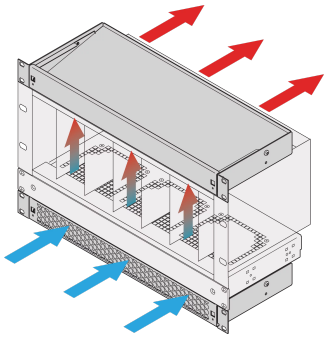

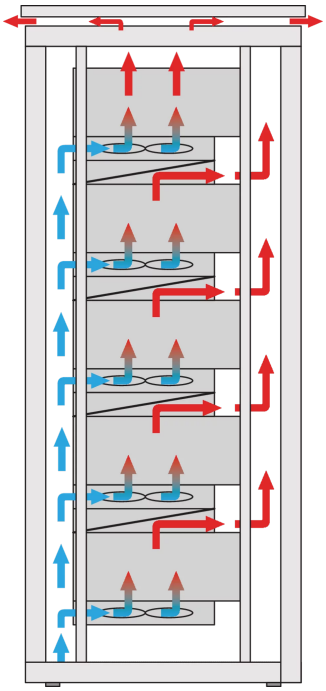

Air deflector with 1 U height to guide the air from front to top or from bottom to rear.

CERTIFICATIONS

RoHS COMPLIANT

FEATURES

Assembly options: – One fan tray: cool air is drawn in from the front and guided upwards – Two fan trays: cool air is drawn in from the front, directed upwards and guided to the rear (see application diagram)

Optimised cooling together with 19" fan trays

Vertical buildup of heat is avoided via improved airflow

Optional filter mat, simple to swap during operation

PRODUCT ATTRIBUTES

Product Type: Air Guide

Product Family: Novastar; Varistar

Works With: 19" Fan Trays

Finish: Powder Coated

Material: Steel

Package Quantity: 1

WARNING

nVent products shall be installed and used only as indicated in nVent's product instruction sheets and training materials. Instruction sheets are available at www.nvent.com and from your nVent customer service representative. Improper installation, misuse, misapplication or other failure to completely follow nVent's instructions and warnings may cause product malfunction, property damage, serious bodily injury and death and/or void your warranty.

North America
All locations
+1.763.422.2661
Chat with us:
nvent.com/schroff

Europe
Straubenhardt, Germany
+49.7082.794.0
Betschdorf, France
+33.3.88.90.64.90
Warsaw, Poland
+48.22.209.98.35
Assago, Italy
+39.02.932.7141
Chat with us:
nvent.com/schroff

Asia
Shanghai, China
+86.21.2412.6943
Qingdao, China
+86.532.8771.6101
Singapore
+65.6768.5800
Shin-Yokohama, Japan
+81.45.476.0271
Chat with us:
nvent.com/schroff

Middle East & India
Dubai, United Arab Emirates
+971.4.378.1700
Bangalore, India
+91.80.6715.2001
Istanbul, Turkey
+90.216.250.7374
Chat with us:
nvent.com/schroff

nVent

Our powerful portfolio of brands:

CADDY ERICO HOFFMAN ILSCO SCHROFF TRACHTE

©2025 nVent. All nVent marks and logos are owned or licensed by nVent Services GmbH or its affiliates. All other trademarks are the property of their respective owners. nVent reserves the right to change specifications without notice.

This document is system-generated.