We connect and protect

Frame Type Plug-In Unit Extruded Side Panel, With Cooling Fins, Right, 6 U, D = 227 mm

CATALOG NUMBER

34813-701

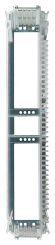

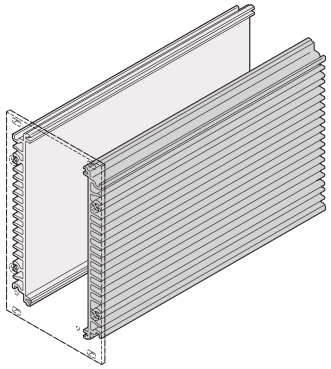

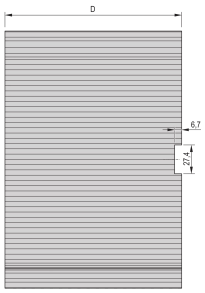

Side Panel for frame type plug-in unit, extruded with cooling Fins. The cooling Fins enable additional heat dissipation via the cooling Fins.

CERTIFICATIONS

RoHS COMPLIANT

FEATURES

The external dimensions (8 ... 42 HP) are unchanged; the available space inside is reduced widthwise by the cooling Fins

With 10 W installed heat dissipation the interior temperature in the module is reduced by about 5 °C

Side Panel with cooling Fins for a frame-type plug-in unit (Al extrusion). The surface is 65% greater than with a side Panel without cooling Fins

PRODUCT ATTRIBUTES

Rack Height: 6U
Design Feature: Right
Package Quantity: 1
PCB Length metric: 227mm
Finish: Passivated
Length: 220mm
Material: Aluminum
Product Type: Side Panel
Type: Side Panel
Net Weight: 0.654kg

ADDITIONAL PRODUCT DETAILS

Side Panels with and without cooling Fins can be combined. Frame type plug-in unit consists of: 2 side Panels, front Panel with handle, rear Panel, cover plate, base plate, fixing kit.

Please take into consideration that deliveries may be carried out in the stated SPQs (SPQ, e.g. 5 pieces, 10 pieces, 50 pieces, etc.). Differing order quantities (e.g. 2 pieces) may be changed to the next possible delivery quantity = Standard Pack Quantity.

WARNING

nVent products shall be installed and used only as indicated in nVent's product instruction sheets and training materials. Instruction sheets are available at www.nvent.com and from your nVent customer service representative. Improper installation, misuse, misapplication or other failure to completely follow nVent's instructions and warnings may cause

North America
All locations
+1.763.422.2661
Chat with us:
nvent.com/schroff

Europe
Straubenhardt, Germany
+49.7082.794.0
Betschdorf, France
+33.3.88.90.64.90
Warsaw, Poland
+48.22.209.98.35
Assago, Italy
+39.02.932.7141
Chat with us:
nvent.com/schroff

Asia
Shanghai, China
+86.21.2412.6943
Qingdao, China
+86.532.8771.6101
Singapore
+65.6768.5800
Shin-Yokohama, Japan
+81.45.476.0271
Chat with us:
nvent.com/schroff

Middle East & India
Dubai, United Arab Emirates
+971.4.378.1700
Bangalore, India
+91.80.6715.2001
Istanbul, Turkey
+90.216.250.7374
Chat with us:
nvent.com/schroff

Our powerful portfolio of brands:

CADDY ERICO HOFFMAN ILSCO SCHROFF TRACHTE

©2025 nVent. All nVent marks and logos are owned or licensed by nVent Services GmbH or its affiliates. All other trademarks are the property of their respective owners. nVent reserves the right to change specifications without notice.

This document is system-generated.