We connect and protect

PCB Bracket for Fixing Front Panel/PCB, Plastic, Red

CATALOG NUMBER

60807-011

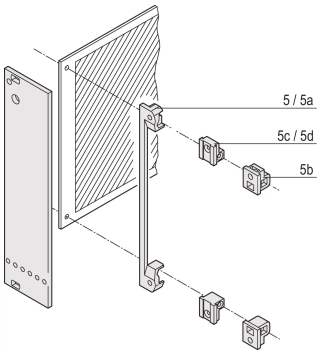

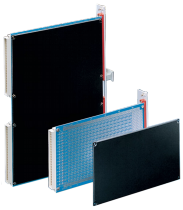

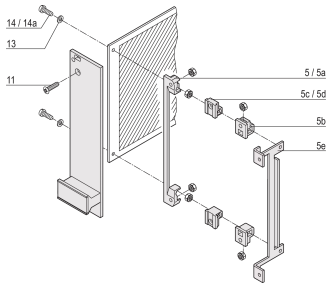

The PCB support brackets enable the fixing of a PCB to front panel. Available in different materials.

CERTIFICATIONS

RoHS COMPLIANT

FEATURES

For fixing PCB to front panel

PRODUCT ATTRIBUTES

Material: Polybutylene Terephthalate

Package Quantity: 1
Flammability Rating: UL® 94V-0
Product Type: Bracket
Type: PCB Bracket
Works With: Front Panels

ADDITIONAL PRODUCT DETAILS

Delivery is in standard pack multiples. Pricing is per individual item.

WARNING

nVent products shall be installed and used only as indicated in nVent's product instruction sheets and training materials. Instruction sheets are available at www.nvent.com and from your nVent customer service representative. Improper installation, misuse, misapplication or other failure to completely follow nVent's instructions and warnings may cause product malfunction, property damage, serious bodily injury and death and/or void your warranty.

North America
All locations
+1.763.422.2661
Chat with us:
nvent.com/schroff

Europe
Straubenhardt, Germany
+49.7082.794.0
Betschdorf, France
+33.3.88.90.64.90
Warsaw, Poland
+48.22.209.98.35
Assago, Italy
+39.02.932.7141
Chat with us:
nvent.com/schroff

Asia
Shanghai, China
+86.21.2412.6943
Qingdao, China
+86.532.8771.6101
Singapore
+65.6768.5800
Shin-Yokohama, Japan
+81.45.476.0271
Chat with us:
nvent.com/schroff

Middle East & India
Dubai, United Arab Emirates
+971.4.378.1700
Bangalore, India
+91.80.6715.2001
Istanbul, Turkey
+90.216.250.7374
Chat with us:
nvent.com/schroff

Our powerful portfolio of brands:

CADDY ERICO HOFFMAN ILSCO SCHROFF TRACHTE

©2025 nVent. All nVent marks and logos are owned or licensed by nVent Services GmbH or its affiliates. All other trademarks are the property of their respective owners. nVent reserves the right to change specifications without notice.

This document is system-generated.