We connect and protect

HF Frame Type Plug-In Unit Body Tube, 10 HP, for 160 mm Deep PCB

CATALOG NUMBER

30809-677

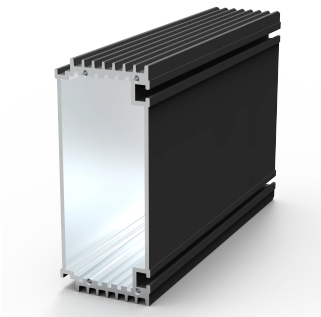

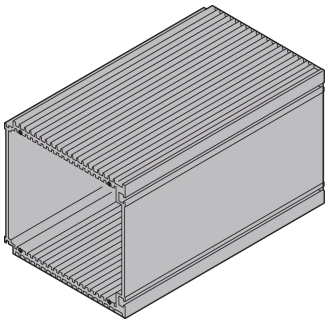

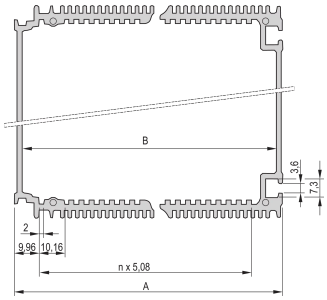

The black HF body tube, for HF frame-type plug-in unit enables a user to insert PCBs.

CERTIFICATIONS

RoHS COMPLIANT

FEATURES

- The black HF body tube, for HF frame-type plug-in unit enables a user to insert PCBs
- The tube offers a shielding against high-frequency radiation
- Module body with cooling Fins
- Plug-in unit can be mounted in a subrack or fitted laterally to a mounting plate with the slide nut

PRODUCT ATTRIBUTES

- Rack Width: 10HP
- Package Quantity: 1
- Finish: Anodized
- Length (L): 167mm
- Material: Aluminum

Product Type: Cover
Rack Height: 3U
Works With: Cassettes
Gross Weight: 0.379kg
PCB Length metric: 160mm

ADDITIONAL PRODUCT DETAILS

Please order front Panel, rear Panel, brackets for PCBs and fixing materials separately.

Please take into consideration that deliveries may be carried out in the stated SPQs (SPQ, e.g. 5 pieces, 10 pieces, 50 pieces, etc.). Differing order quantities (e.g. 2 pieces) may be changed to the next possible delivery quantity = Standard Pack Quantity.

DIAGRAMS

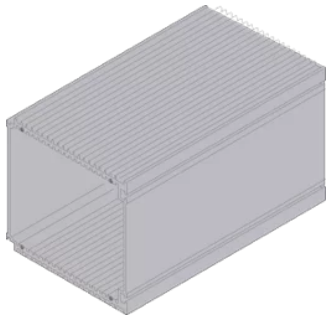

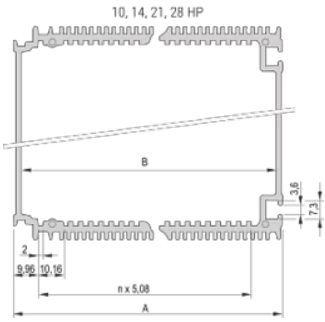

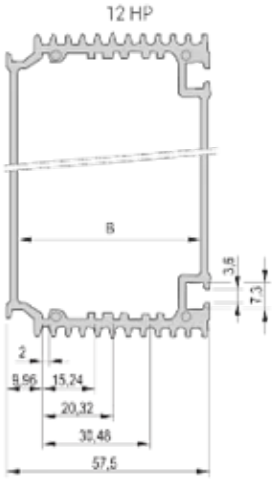

WARNING

nVent products shall be installed and used only as indicated in nVent's product instruction sheets and training materials. Instruction sheets are available at www.nvent.com and from your nVent customer service representative. Improper installation, misuse, misapplication or other failure to completely follow nVent's instructions and warnings may cause product malfunction, property damage, serious bodily injury and death and/or void your warranty.

North America
All locations
+1.763.422.2661
Chat with us:
nvent.com/schroff

Europe
Straubenhardt, Germany
+49.7082.794.0
Betschdorf, France
+33.3.88.90.64.90
Warsaw, Poland
+48.22.209.98.35
Assago, Italy
+39.02.932.7141
Chat with us:
nvent.com/schroff

Asia
Shanghai, China
+86.21.2412.6943
Qingdao, China
+86.532.8771.6101
Singapore
+65.6768.5800
Shin-Yokohama, Japan
+81.45.476.0271
Chat with us:
nvent.com/schroff

Middle East & India
Dubai, United Arab Emirates
+971.4.378.1700
Bangalore, India
+91.80.6715.2001
Istanbul, Turkey
+90.216.250.7374
Chat with us:
nvent.com/schroff

Our powerful portfolio of brands:

CADDY ERICO HOFFMAN ILSCO SCHROFF TRACHTE

©2025 nVent. All nVent marks and logos are owned or licensed by nVent Services GmbH or its affiliates. All other trademarks are the property of their respective owners. nVent reserves the right to change specifications without notice.

This document is system-generated.