We connect and protect

Mounting Bracket With Insulating Block for Busbar 1, 2 Poles

Data Solutions

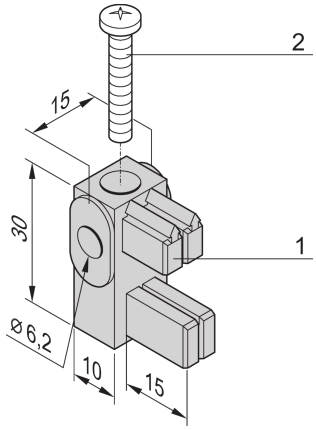

Mounting Brackets for Busbars or Busbar Modules are load circuit isolated mounting units for grounding rails. There may be adapters with assigned current ratings which supply the load current to loadfeeders through wire connections.

CERTIFICATIONS

RoHS COMPLIANT

EAC

FEATURES

Mounting Bracket With Insulating Block for Busbar 1, 2 Poles

SPECIFICATIONS

Table 1/1

Catalog Number	Material	Package Quantity
20100-030	Polyphenylene Ether	4

ADDITIONAL PRODUCT DETAILS

M6 screw, washer and nut for row mounting not included.

WARNING

nVent products shall be installed and used only as indicated in nVent's product instruction sheets and training materials. Instruction sheets are available at www.nvent.com and from your nVent customer service representative. Improper installation, misuse, misapplication or other failure to completely follow nVent's instructions and warnings may cause product malfunction, property damage, serious bodily injury and death and/or void your warranty.

Our powerful portfolio of brands:

CADDY ERICO HOFFMAN ILSCO SCHROFF TRACHTE

©2025 nVent. All nVent marks and logos are owned or licensed by nVent Services GmbH or its affiliates. All other trademarks are the property of their respective owners. nVent reserves the right to change specifications without notice.

This document is system-generated.