We connect and protect

C-Profile Adaptor for Subracks Assembled into Cabinets, 295 mm

CATALOG NUMBER

24562-455

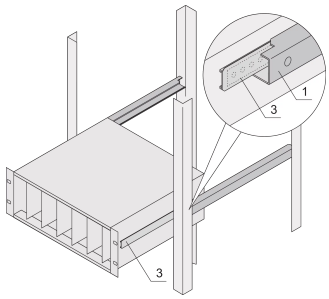

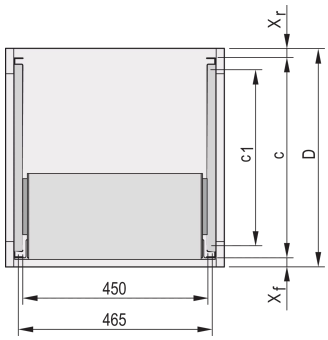

The C-profile, assembled on the Side Panel of the subrack serves fixes the subrack on the guiding profile when mounted into a cabinet.

CERTIFICATIONS

RoHS COMPLIANT

FEATURES

The C-profile fixes the subrack on the guiding profile when mounted into a cabinet.

PRODUCT ATTRIBUTES

Depth: 295mm

Package Quantity: 2

Finish: Anodized

Material: Aluminum

Product Family: EuropacPRO

Product Type: Telescopic Slide

Works With: Subracks

ADDITIONAL PRODUCT DETAILS

Note: No end stop when pulling out the subrack.

WARNING

nVent products shall be installed and used only as indicated in nVent's product instruction sheets and training materials. Instruction sheets are available at www.nvent.com and from your nVent customer service representative. Improper installation, misuse, misapplication or other failure to completely follow nVent's instructions and warnings may cause product malfunction, property damage, serious bodily injury and death and/or void your warranty.

North America
All locations
+1.763.422.2661
Chat with us:
nvent.com/schroff

Europe
Straubenhardt, Germany
+49.7082.794.0
Betschdorf, France
+33.3.88.90.64.90
Warsaw, Poland
+48.22.209.98.35
Assago, Italy
+39.02.932.7141
Chat with us:
nvent.com/schroff

Asia
Shanghai, China
+86.21.2412.6943
Qingdao, China
+86.532.8771.6101
Singapore
+65.6768.5800
Shin-Yokohama, Japan
+81.45.476.0271
Chat with us:
nvent.com/schroff

Middle East & India
Dubai, United Arab Emirates
+971.4.378.1700
Bangalore, India
+91.80.6715.2001
Istanbul, Turkey
+90.216.250.7374
Chat with us:
nvent.com/schroff

Our powerful portfolio of brands:

CADDY ERICO HOFFMAN ILSCO SCHROFF TRACHTE

©2025 nVent. All nVent marks and logos are owned or licensed by nVent Services GmbH or its affiliates. All other trademarks are the property of their respective owners. nVent reserves the right to change specifications without notice.

This document is system-generated.