We connect and protect

EuropacPRO Cover Plate for Bolting to Side Panel, 84 HP, 295 mm

CATALOG NUMBER

24560-080

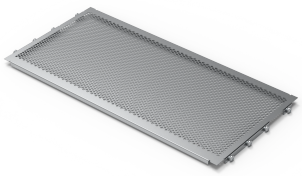

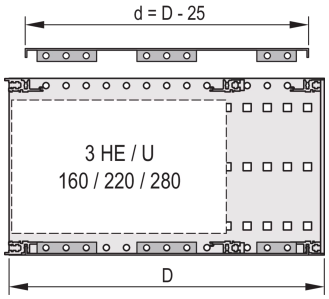

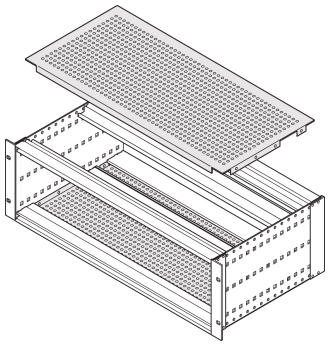

A cover plate is used for electromagnetic shielding or as mechanical protection. The cover can be screwed onto the side panel.

CERTIFICATIONS

RoHS COMPLIANT

FEATURES

- For variable positioning of horizontal rails e.g. for PCBs with standard formats
- Perforation degree 58%
- Suitable for use with all horizontal rails

PRODUCT ATTRIBUTES

- Rack Width: 84HP
- Depth: 295mm
- Package Quantity: 2
- Finish: Passivated
- Material: Aluminum

Product Family: EuropacPRO
Product Type: Cover Plate
Type: Perforated
Works With: Subracks
Net Weight: 0.49kg
Package Unit: Pair
Torque: 2.1N·m

WARNING

nVent products shall be installed and used only as indicated in nVent's product instruction sheets and training materials. Instruction sheets are available at www.nvent.com and from your nVent customer service representative. Improper installation, misuse, misapplication or other failure to completely follow nVent's instructions and warnings may cause product malfunction, property damage, serious bodily injury and death and/or void your warranty.

North America
All locations
+1.763.422.2661
Chat with us:
nvent.com/schroff

Europe
Straubenhardt, Germany
+49.7082.794.0
Betschdorf, France
+33.3.88.90.64.90
Warsaw, Poland
+48.22.209.98.35
Assago, Italy
+39.02.932.7141
Chat with us:
nvent.com/schroff

Asia
Shanghai, China
+86.21.2412.6943
Qingdao, China
+86.532.8771.6101
Singapore
+65.6768.5800
Shin-Yokohama, Japan
+81.45.476.0271
Chat with us:
nvent.com/schroff

Middle East & India
Dubai, United Arab Emirates
+971.4.378.1700
Bangalore, India
+91.80.6715.2001
Istanbul, Turkey
+90.216.250.7374
Chat with us:
nvent.com/schroff

Our powerful portfolio of brands:

CADDY ERICO HOFFMAN ILSCO SCHROFF TRACHTE

©2025 nVent. All nVent marks and logos are owned or licensed by nVent Services GmbH or its affiliates. All other trademarks are the property of their respective owners. nVent reserves the right to change specifications without notice.

This document is system-generated.