We connect and protect

Varistar Adapter Bracket for Reduced Width

CATALOG NUMBER

23130-091

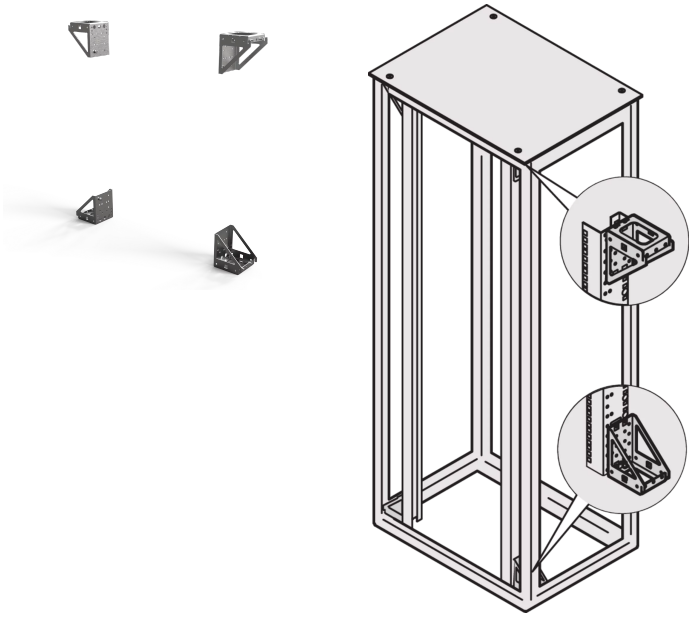

Varistar Adapter Bracket for reduced Width for the assembly of 2 panel/slide mounts. It comes in combination with the assembly of depth members, recessed of shortened 19" panel/slide mounts.

CERTIFICATIONS

RoHS COMPLIANT

FEATURES

- For the assembly of 2 panel/slide mounts
- For 800 mm wide cabinets to implement 19 " mounting
- In combination with the assembly of depth members, recessed of shortened 19" panel/slide mounts

PRODUCT ATTRIBUTES

Product Type: Bracket

Product Family: Varistar
Type: Adapter Bracket
Works With: Varistar CP
Material: Steel
Finish: Aluminum-Zinc Plated
Package Quantity: 4

WARNING

nVent products shall be installed and used only as indicated in nVent's product instruction sheets and training materials. Instruction sheets are available at www.nvent.com and from your nVent customer service representative. Improper installation, misuse, misapplication or other failure to completely follow nVent's instructions and warnings may cause product malfunction, property damage, serious bodily injury and death and/or void your warranty.

North America
All locations
+1.763.422.2661
Chat with us:
nvent.com/schroff

Europe
Straubenhardt, Germany
+49.7082.794.0
Betschdorf, France
+33.3.88.90.64.90
Warsaw, Poland
+48.22.209.98.35
Assago, Italy
+39.02.932.7141
Chat with us:
nvent.com/schroff

Asia
Shanghai, China
+86.21.2412.6943
Qingdao, China
+86.532.8771.6101
Singapore
+65.6768.5800
Shin-Yokohama, Japan
+81.45.476.0271
Chat with us:
nvent.com/schroff

Middle East & India
Dubai, United Arab Emirates
+971.4.378.1700
Bangalore, India
+91.80.6715.2001
Istanbul, Turkey
+90.216.250.7374
Chat with us:
nvent.com/schroff

Our powerful portfolio of brands:

CADDY ERICO HOFFMAN ILSCO SCHROFF TRACHTE

©2025 nVent. All nVent marks and logos are owned or licensed by nVent Services GmbH or its affiliates. All other trademarks are the property of their respective owners. nVent reserves the right to change specifications without notice.

This document is system-generated.