We connect and protect

Inserter/Extractor Handle Type IET, Black Lever, Grey Button, Bottom; 10 pieces

CATALOG NUMBER

20817-652

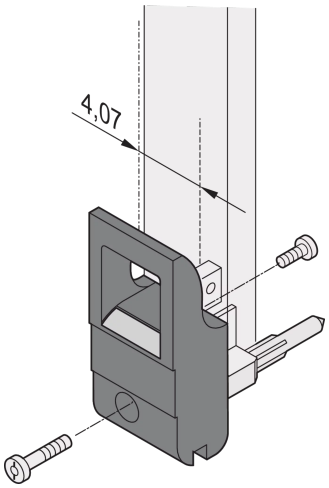

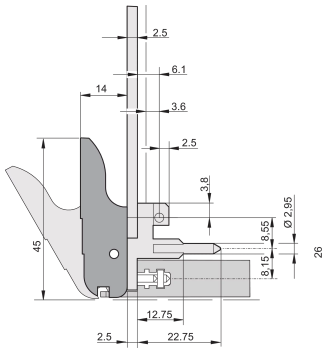

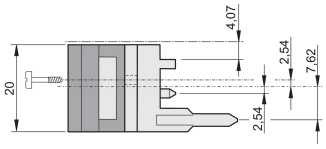

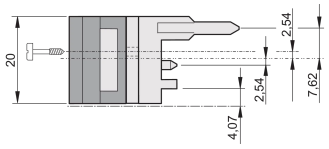

The inserter/extractor handle, type IET in accordance with IEEE 1101.10. Two of these handles can overcome a single lever force of 700 N (per pair).

CERTIFICATIONS

RoHS COMPLIANT

EN 45545

FEATURES

- Suitable for insertion and extraction forces up to 700 N (per pair)
- In accordance with IEEE 1101.10 and IEC 60297-3-102
- A microswitch can be mounted

PRODUCT ATTRIBUTES

Package Quantity: 10
Handle Type: IET; Bottom Front; Top Rear I/O
Flammability Rating: UL® 94V-0
Color: Jet Black
Color Code: RAL 9005
Complies With: EN 45545-2
Depth (D): 39.15mm
Height (H): 44.65mm
Material: Polycarbonate; Zinc Alloy
Product Type: Handle
Type: Inserter/Extractor, Standard
Width (W): 19.8mm
Works With: Front Panels

ADDITIONAL PRODUCT DETAILS

Please order Coding pegs and Microswitch separately.

DIAGRAMS

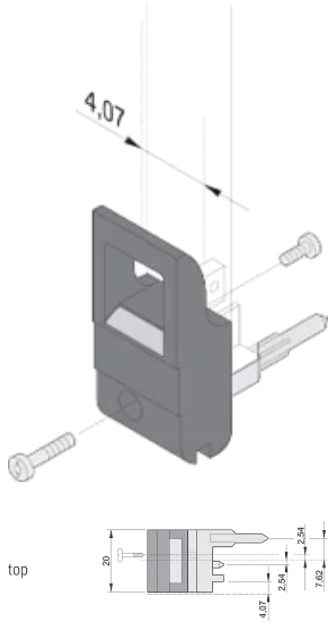

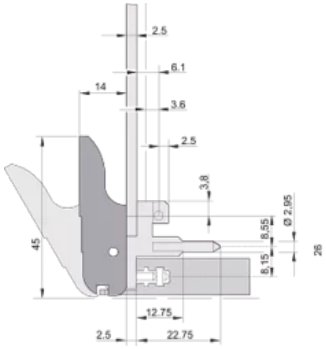

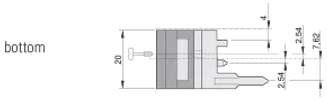

WARNING

nVent products shall be installed and used only as indicated in nVent's product instruction sheets and training materials. Instruction sheets are available at www.nvent.com and from your nVent customer service representative. Improper installation, misuse, misapplication or other failure to completely follow nVent's instructions and warnings may cause product malfunction, property damage, serious bodily injury and death and/or void your warranty.

North America
All locations
+1.763.422.2661
Chat with us:
nvent.com/schroff

Europe
Straubenhardt, Germany
+49.7082.794.0
Betschdorf, France
+33.3.88.90.64.90
Warsaw, Poland
+48.22.209.98.35
Assago, Italy
+39.02.932.7141
Chat with us:
nvent.com/schroff

Asia
Shanghai, China
+86.21.2412.6943
Qingdao, China
+86.532.8771.6101
Singapore
+65.6768.5800
Shin-Yokohama, Japan
+81.45.476.0271
Chat with us:
nvent.com/schroff

Middle East & India
Dubai, United Arab Emirates
+971.4.378.1700
Bangalore, India
+91.80.6715.2001
Istanbul, Turkey
+90.216.250.7374
Chat with us:
nvent.com/schroff

Our powerful portfolio of brands:

CADDY ERICO HOFFMAN ILSCO SCHROFF TRACHTE

©2025 nVent. All nVent marks and logos are owned or licensed by nVent Services GmbH or its affiliates. All other trademarks are the property of their respective owners. nVent reserves the right to change specifications without notice.

This document is system-generated.