We connect and protect

nVent CADDY Rod Lock Anchor Screw

CERTIFICATIONS

FM APPROVED

FEATURES

For use with concrete and solid brick

Prefabricated assemblies easily lift and lock into place, helping to save time and money

Works with slightly damaged threads and minor burrs on the threaded rod

SPECIFICATIONS

Table 1/2

Catalog Number	Material	Finish	Rod Size (RS)	B	C	Length (L)
CRLA37EG	Steel	Electrogalvanized	0.375	32 mm	22 mm	72mm

Table 2/2

Catalog Number	Drill Bit Diameter	Drill Hole Depth	Static Load
CRLA37EG	8mm	50mm	2900N

DIAGRAMS

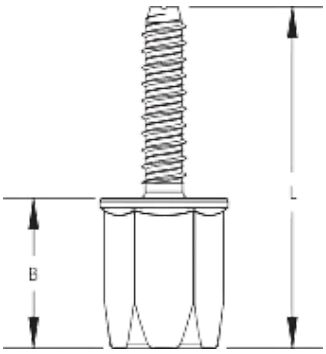

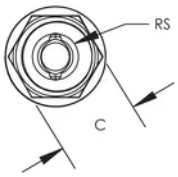

WARNING

nVent products shall be installed and used only as indicated in nVent's product instruction sheets and training materials. Instruction sheets are available at www.nvent.com and from your nVent customer service representative. Improper installation, misuse, misapplication or other failure to completely follow nVent's instructions and warnings may cause product malfunction, property damage, serious bodily injury and death and/or void your warranty.

North America
+1.800.753.9221
Option 1 – Customer Care
Option 2 – Technical Support

Europe
Netherlands:
+31 800-0200135
France:
+33 800 901 793

Europe
Germany:
800 1890272
Other Countries:
+31 13 5835404

APAC
Shanghai:
+ 86 21 2412 1618/19
Sydney:
+61 2 9751 8500

Our powerful portfolio of brands:

CADDY ERICO HOFFMAN ILSCO SCHROFF TRACHTE

©2025 nVent. All nVent marks and logos are owned or licensed by nVent Services GmbH or its affiliates. All other trademarks are the property of their respective owners. nVent reserves the right to change specifications without notice.

This document is system-generated.