We connect and protect

Front Panel EMC Stainless Steel Shielding Kit, 3 U; 100 pieces

CATALOG NUMBER

21101-706

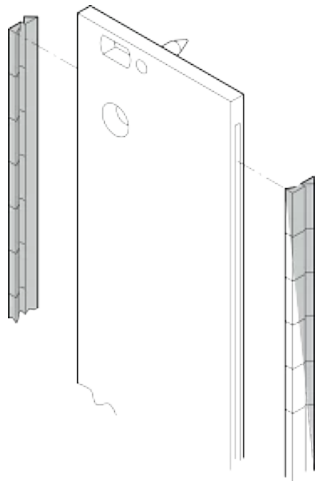

The stainless steel EMC gaskets are inserted into the lateral slots of the shieldable front panels (2 pieces per front panel).

CERTIFICATIONS

RoHS COMPLIANT

FEATURES

The stainless steel EMC gaskets are inserted into the lateral slots of the shieldable front panels (2 pieces per front panel)

EMC contact strip, stainless steel

Temperature range -200 °C ... +160 °C

PRODUCT ATTRIBUTES

Rack Height: 3U

Package Quantity: 100

Depth (D): 2.22mm

Height (H): 97mm

Material: Stainless Steel
Product Family: EuropacPRO; RatiopacPRO; RatiopacPRO AIR; PropacPRO; Frame Type Plug-In Unit
Product Type: Shielding Kit
Width (W): 4.97mm
Works With: Subracks; Cases; Front Panels

ADDITIONAL PRODUCT DETAILS

Please order assembly tool separately.

DIAGRAMS

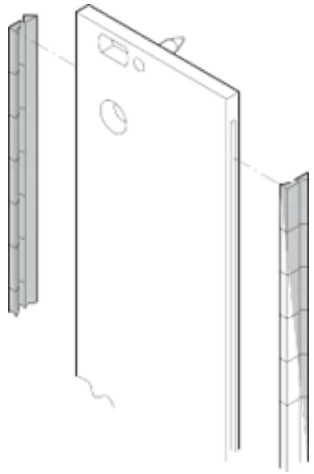

WARNING

nVent products shall be installed and used only as indicated in nVent's product instruction sheets and training materials. Instruction sheets are available at www.nvent.com and from your nVent customer service representative. Improper installation, misuse, misapplication or other failure to completely follow nVent's instructions and warnings may cause

North America
All locations
+1.763.422.2661
Chat with us:
nvent.com/schroff

Europe
Straubenhardt, Germany
+49.7082.794.0
Betschdorf, France
+33.3.88.90.64.90
Warsaw, Poland
+48.22.209.98.35
Assago, Italy
+39.02.932.7141
Chat with us:
nvent.com/schroff

Asia
Shanghai, China
+86.21.2412.6943
Qingdao, China
+86.532.8771.6101
Singapore
+65.6768.5800
Shin-Yokohama, Japan
+81.45.476.0271
Chat with us:
nvent.com/schroff

Middle East & India
Dubai, United Arab Emirates
+971.4.378.1700
Bangalore, India
+91.80.6715.2001
Istanbul, Turkey
+90.216.250.7374
Chat with us:
nvent.com/schroff

Our powerful portfolio of brands:
CADDY ERICO HOFFMAN ILSCO SCHROFF TRACHTE

©2025 nVent. All nVent marks and logos are owned or licensed by nVent Services GmbH or its affiliates. All other trademarks are the property of their respective owners. nVent reserves the right to change specifications without notice.

This document is system-generated.