We connect and protect

EuropacPRO Cover Plate for Bolting to Rugged Side Panel, 84 HP, 355 mm

CATALOG NUMBER

24568-020

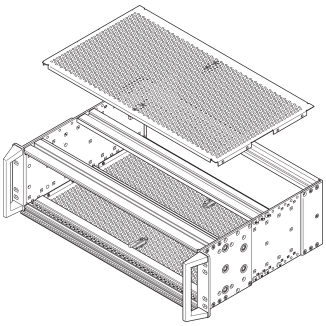

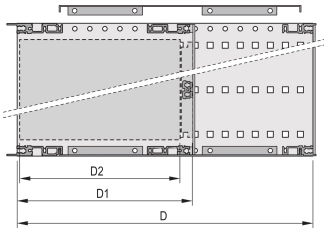

A cover plate is used for electromagnetic shielding or as mechanical protection.

CERTIFICATIONS

RoHS COMPLIANT

FEATURES

Perforation degree 58%

PRODUCT ATTRIBUTES

Depth: 355mm
Package Quantity: 2
Finish: Passivated
Material: Aluminum
Product Family: EuropacPRO
Product Type: Cover Plate
Rack Width: 84HP
Type: Perforated

Works With: Subracks

Package Unit: Pair

Torque: 2.1N·m

ADDITIONAL PRODUCT DETAILS

A top cover locking mechanism is optionally available that also fixes the top cover in the front and rear guide rail.

4 stainless steel EMC contact strips per subrack are required for shielding, please order separately.

WARNING

nVent products shall be installed and used only as indicated in nVent's product instruction sheets and training materials. Instruction sheets are available at www.nvent.com and from your nVent customer service representative. Improper installation, misuse, misapplication or other failure to completely follow nVent's instructions and warnings may cause product malfunction, property damage, serious bodily injury and death and/or void your warranty.

North America
All locations
+1.763.422.2661
Chat with us:
nvent.com/schroff

Europe
Straubenhardt, Germany
+49.7082.794.0
Betschdorf, France
+33.3.88.90.64.90
Warsaw, Poland
+48.22.209.98.35
Assago, Italy
+39.02.932.7141
Chat with us:
nvent.com/schroff

Asia
Shanghai, China
+86.21.2412.6943
Qingdao, China
+86.532.8771.6101
Singapore
+65.6768.5800
Shin-Yokohama, Japan
+81.45.476.0271
Chat with us:
nvent.com/schroff

Middle East & India
Dubai, United Arab Emirates
+971.4.378.1700
Bangalore, India
+91.80.6715.2001
Istanbul, Turkey
+90.216.250.7374
Chat with us:
nvent.com/schroff

Our powerful portfolio of brands:

CADDY ERICO HOFFMAN ILSCO SCHROFF TRACHTE

©2025 nVent. All nVent marks and logos are owned or licensed by nVent Services GmbH or its affiliates. All other trademarks are the property of their respective owners. nVent reserves the right to change specifications without notice.

This document is system-generated.