We connect and protect

Telescopic Slides C-Profile for Cabinet for Fitting Eurorack, 800 mm

CATALOG NUMBER

24562-451

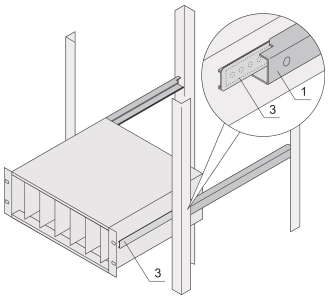

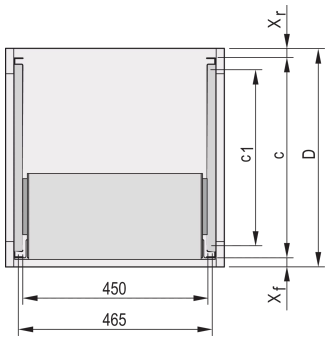

Telescopic slides with guiding profile for fitting in cabinets with 25 kg load capacity.

CERTIFICATIONS

RoHS COMPLIANT

FEATURES

For mounting 84 HP wide subracks in the 19" plane

Loading capacity: 25 kg per pair

The guiding profile (1) is matched to the fixing dimension in the cabinet (it is bolted to the 19" profile of the cabinet); the adaptor Rail (3) is matched to the depth and fixing dimension on the subrack (it is inserted into the guiding profile like a telescopic slide)

PRODUCT ATTRIBUTES

Product Family: Eurorack

Depth: 800mm

Package Quantity: 2

Finish: Anodized

Material: Aluminum

Product Type: Telescopic Slide

Type: C Profile

ADDITIONAL PRODUCT DETAILS

No protection against extraction, no stop at full extension.

The reinforcement Rail and the C-Rails have been tested in accordance with the Russian atomic energy authority GAN standards.

WARNING

nVent products shall be installed and used only as indicated in nVent's product instruction sheets and training materials. Instruction sheets are available at www.nvent.com and from your nVent customer service representative. Improper installation, misuse, misapplication or other failure to completely follow nVent's instructions and warnings may cause product malfunction, property damage, serious bodily injury and death and/or void your warranty.

North America
All locations
+1.763.422.2661
Chat with us:
nvent.com/schroff

Europe
Straubenhardt, Germany
+49.7082.794.0
Betschdorf, France
+33.3.88.90.64.90
Warsaw, Poland
+48.22.209.98.35
Assago, Italy
+39.02.932.7141
Chat with us:
nvent.com/schroff

Asia
Shanghai, China
+86.21.2412.6943
Qingdao, China
+86.532.8771.6101
Singapore
+65.6768.5800
Shin-Yokohama, Japan
+81.45.476.0271
Chat with us:
nvent.com/schroff

Middle East & India
Dubai, United Arab Emirates
+971.4.378.1700
Bangalore, India
+91.80.6715.2001
Istanbul, Turkey
+90.216.250.7374
Chat with us:
nvent.com/schroff

Our powerful portfolio of brands:

CADDY ERICO HOFFMAN ILSCO SCHROFF TRACHTE

©2025 nVent. All nVent marks and logos are owned or licensed by nVent Services GmbH or its affiliates. All other trademarks are the property of their respective owners. nVent reserves the right to change specifications without notice.

This document is system-generated.